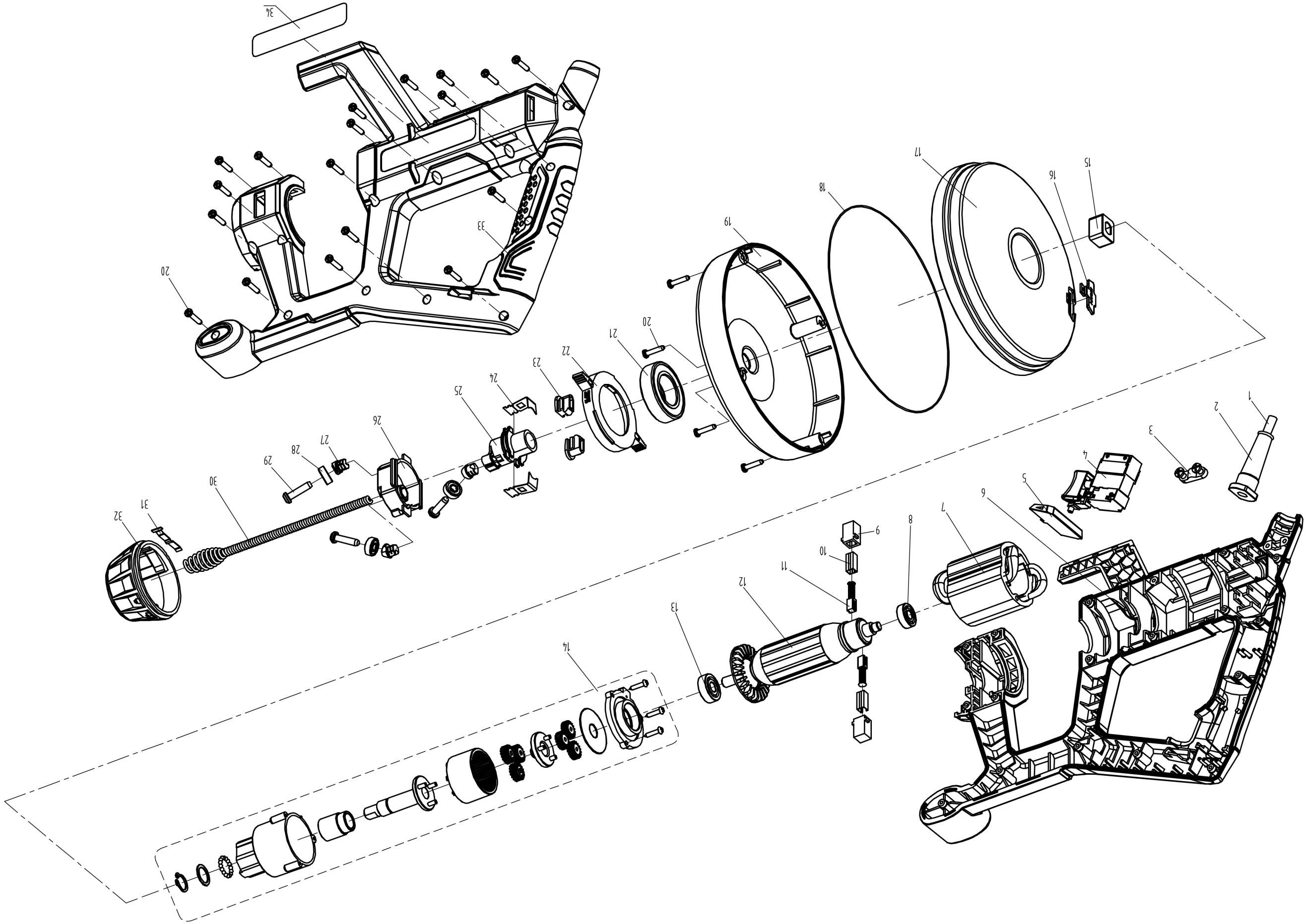
1
2
3
4
5
6
7
8
9
10
11
12
13
14
15
16
17
18
19
20
21
22
23
24
25
26
27
28
29
30
31
32
33
34

Drain Auger Part List

NO	DESCRIPTION
1	Cable
2	Cable jacket
3	Cable clamp asm
4	Switch
5	Button
6	Left casing
7	Stator
8	Bearing 607-2Z
9	Brush holder
10	Copper bush
11	Carbon brush
12	Rotor
13	Bearing 608-2Z
14	Gear box assy
15	Link block
16	Drain cover
17	Wire box
18	Sealing strip
19	Wire box cover
20	Tapping screw ST3.5×16

NO	DESCRIPTION
21	Bearing 6005-2Z
22	Clamping ring
23	Sliding block
24	Stainless steel shrapnel
25	Static support seat
26	Dynamic support seat
27	Supporting leg
28	Bearing 696-2Z
29	Tapping screw ST5.8×16
30	Steel cable
31	shift shrapnel
32	Adjusting cup
33	right housing
34	rating label